Radiant Heater

PRODUCT MANUAL

HEATSTRIP®

# Max Black 3600 W

**Reference: THX-3600-EU-B**




**3 600 W · Black**

External control

Mounting, controls and maintenance of your heater.

A document dedicated to this reference, with useful guidance for enjoying your outdoor space.

**English**

**HEATSTRIP · THX-3600-EU-B**

# Your product in detail

| | |
|---|---|
| Radiant Heater reference | THX-3600-EU-B |
| Range | Max Black |
| Rated power | 3 600 W |
| Power supply | European version: 230 V AC |
| Dimensions | 1 184 × 170 × 80 mm |
| Weight | 6 kg |
| Finish | Black |
| Protection rating | IPX5 |
| Control | External control |
| Mains cable | 1 m |
| Connection | Cable without plug - fixed connection |

## How the heater works

Incoloy 840 elements with Soft-Glow light emission.

## Consumption at full power

One hour of operation at maximum power uses 3.6 kWh. Actual consumption depends on operating time and the selected level, where the model allows adjustment.

**HEATSTRIP · THX-3600-EU-B**

# Position the heater

| | |
|---|---|
| Minimum heater height | 2.1 m |
| Recommended mounting height | 2.4 to 3.5 m |
| Maximum height | 3.5 m |

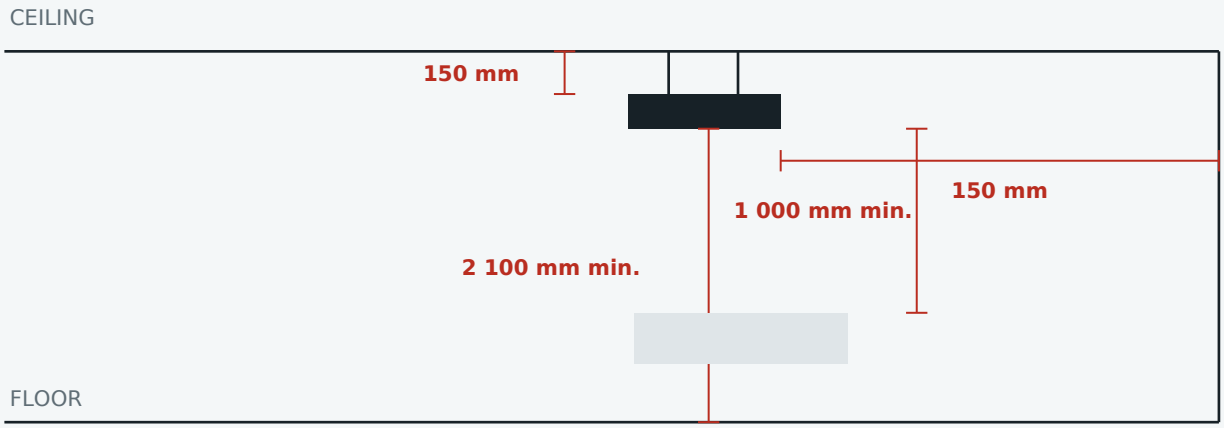


Ceiling example; minimum values in millimetres.

| | |
|---|---|
| Radiant face / surface below | 1 000 mm minimum |
| Ceiling, horizontal mounting | 150 mm minimum |
| Ceiling, angled mounting | 150 mm minimum |
| Rear wall, angled mounting | 150 mm minimum |

Keep at least 300 mm between the angled heater and any lights or fans shown in front of it. For horizontal mounting, the manual specifies 300 mm. Do not position any light, fan or sprinkler below the heater.

HEATSTRIP · THX-3600-EU-B

# Mounting and connection

## 01. Mark the fixing points

Determine the positions of the two brackets in the supporting structure. Allow for the heater's weight, mounting height and installation clearances.

## 02. Secure the brackets

Use anchors suited to the wall, ceiling or beam. Fix the kit brackets and check that they are secure before offering up the heater.

## 03. Position the heater

Insert the connecting pieces into the grooves or fittings on the back of the heater. Place the heater on its brackets and adjust its direction.

## 04. Lock the assembly

Tighten the connections and check that both brackets hold the heater. Keep its heating face directed towards the occupied area and its length horizontal.

**BRACKET SPACING**

Minimum distance between the two brackets for this reference: 600 mm.

## Electrical supply

Disconnect the power before making any connection. The circuit, controls and connections must suit the product's rated power. Keep the cable away from hot surfaces and maintain earth continuity for the intended connection.

This model is supplied without a plug. Provide a fixed connection and a means of disconnecting the power, using protected connections suited to the location.

Before first switching on, check the fastenings, stability, cable route and clear space around the heater.

HEATSTRIP · THX-3600-EU-B

# Controls and use

## An external control suited to your heater

This model uses external power control suited to its load: a switch, timer or control device intended for the circuit.

Switch the heater on using this control, then switch it off after use. A compatible timer can switch it off automatically.

| | |
|---|---|
| Switching on | Using the external control |
| Rated power | 3 600 W |
| Off | External control or compatible timer |

## TT-MTR option

The TT-MTR wall controller offers 1, 2 or 4 hours, plus continuous mode. Its switching capacity is 16 A; the total connected load must stay within this limit.

**WELL-POSITIONED WARMTH**

Direct the heater towards the people and surfaces to be heated. For panel models, allow the heater to gradually reach its operating temperature.

## After use

Switch off the heater using its controls. Let it cool completely before touching or cleaning it, or moving a heater on a stand.

HEATSTRIP · THX-3600-EU-B

# Maintenance and your contact

## Regular cleaning

Switch the heater off, disconnect its power supply and wait until it has cooled completely. The manuals specify at least 30 minutes after switch-off.

Clean the surfaces with a soft cloth and mild detergent, then remove residues with a clean cloth. Avoid abrasives, solvents and high-pressure jets. Keep electrical equipment and recess cavities protected from water.

Check the cable, brackets and fastenings. Maintenance at least every three months helps preserve the heater; clean more often where it is exposed to sea spray.

## Guidelines for use

Keep children and people who need supervision away from hot surfaces. In a small space, continuously supervise anyone who cannot leave without help.

Do not cover the heater during use. Keep cables, fabrics, furniture and flammable materials away from its surfaces and observe the installation clearances.

If the cable or heater is damaged, disconnect the power and contact Radiant Heater before using it again.

## A simple check if the heater does not start

| | |
|---|---|
| Power supply | Check that power is available and the control is set correctly. |
| External control / timer | Check the control setting and selected duration if a timer is fitted. |

**YOUR RADIANT HEATER CONTACT**

**+33 (0)4 23 15 02 48**
radiant-heater.com/contact
For advice, quote reference THX-3600-EU-B and the mounting arrangement.